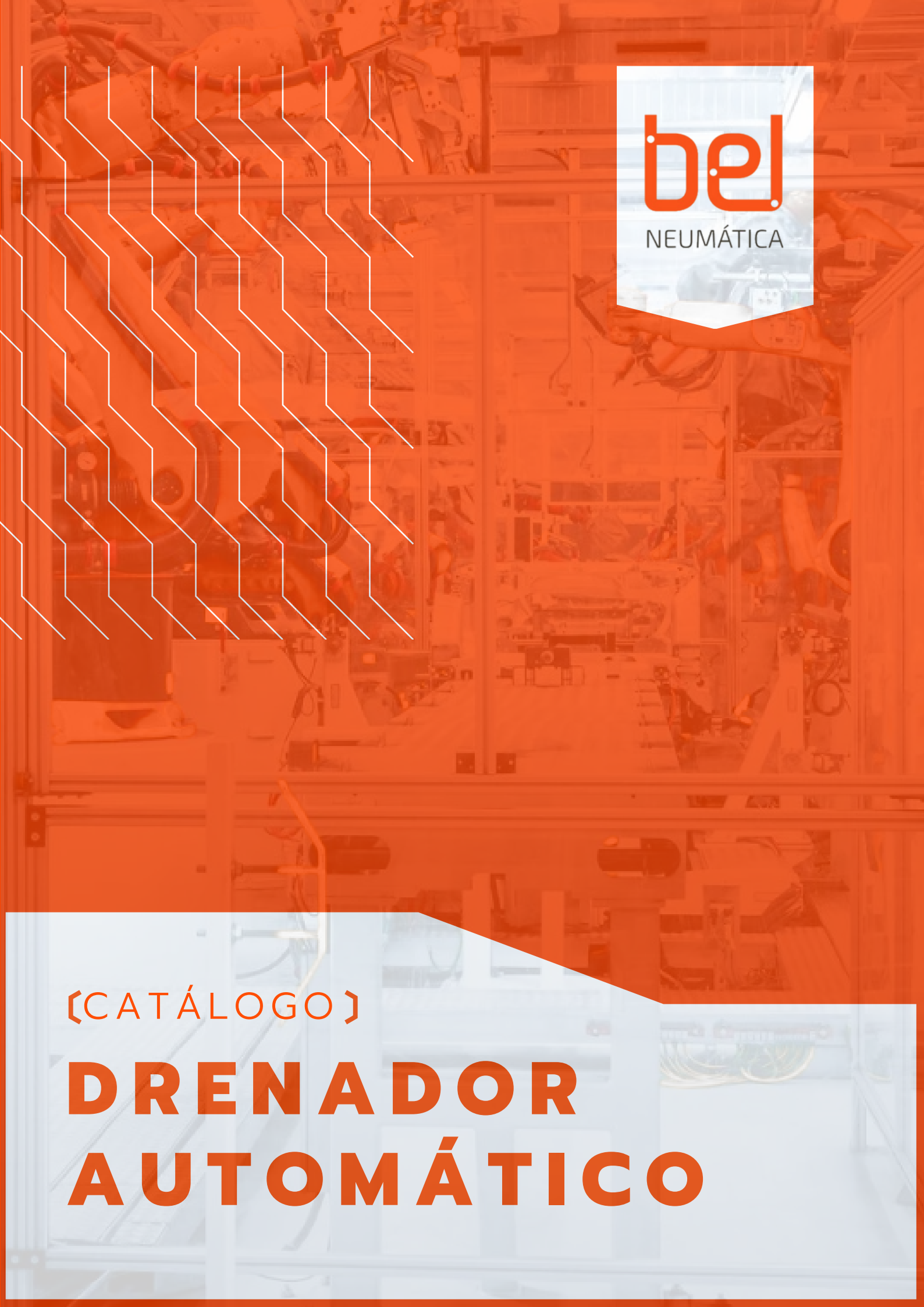

bel
NEUMÁTICA

{CATÁLOGO}

DRENADOR AUTOMÁTICO

SMC Standard Auto Drain
AD401 AD402

Specifications



AD402

Symbol



Model	AD401	AD402
Proof pressure	1.5 MPa	1.5 MPa
Max. operating pressure	1.0 MPa	1.0 MPa
Operating pressure range (1)	0.15~1.0 MPa	0.1~1.0 MPa
Ambient and fluid temperature	-5 to 60℃ (No freezing)	-5 to 60℃ (No freezing)
Port size	Rc1/4, 3/8, 1/2	Rc1/4, 3/8, 1/2
Drain discharge port size	1/8	3/8
Weight	300g	620g

Note(1): Use for air compressor with flow larger than 400 l/min (ANR).

Drainage is automatically discharged in a reliable manner, without requiring human operators.

Highly resistant to dust and corrosion, operates reliably, and a bowl guard is provided as standard equipment.

Selection

⚠ Warning

1. Use auto-drain under the following operating conditions, or it will lead to malfunctions.
1) Operate the compressor above 3.7 kw {400 l/min (ANR)}.
2) Use AD402 at an operating pressure above 0.1 Mpa.

Piping

⚠ Warning

1. Use auto-drain under the following operating conditions, or it will lead to alfunctions.
To connect a drain discharge pipe, use a pipe with a minimum bore of Φ10, and a maximum length of 5 m. Avoid using a riser pipe.

AD402

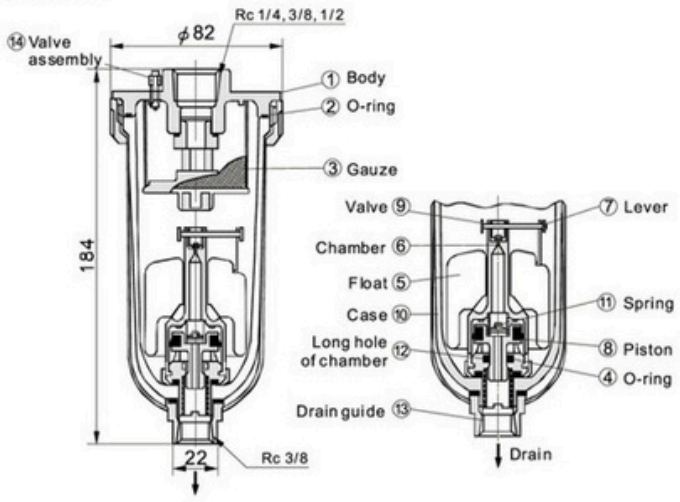

◆ Component Parts

No.	Description	Material
①	Body	Aluminum die-casted

◆ Replacement Parts

No.	Description	Material	Model	
			AD402	AD402S
②	O-ring	NBR	11316	
③	Gauze	Stainless steel	20062	
(1)	Internal assembly	—	AD34PA	
⑧	Piston assembly	—	—	
⑭	Valve assembly	—	201037P	

Note 1) Internal assembly: Assembly for parts④to⑫except⑩.
Note 2) Part no. for bowl assembly: AD34
Note 3) Part no. for bowl⑩: 201016

- **Working principle (AD402)**
- When no pressure is applied internally to bowl⑩, float⑤descends of its own weight and valve⑨closes chamber hole⑥. Piston⑧is pushed down by spring⑪, and the drainage passes through the chamber's elongated hole⑫to enter the housing and is discharged. When pressure is applied internally to the bowl: When pressure is larger than 1 MPa, it overcomes the force of spring⑪, allowing piston⑧to ascend, and comes in contact with O-ring④.
- Thus, the inside of bowl⑩is isolated from the outside.
When drainage has accumulated: Float⑤ascends due to flotation and opens the chamber's hole ⑥,allowing the pressure to enter chamber⑥. Piston⑧descends due to the force of the internal pressure and spring⑩, and the accumulated drainage is discharged through drain guide ⑬

Apóstoles Norte 1725 | Oberá (3360) Misiones | Argentina
Wsp: (3755) 576587 | ventas@belneumática.com.ar (www.belneumatica.com.ar)

SMC Standard Auto Drain
AH402 High Pressure/ ZDFS

Specifications



Model	AH402-02	AH402-03	AH402-04
Ensured Pressure Resistance		2.5MPa	
Operating Pressure		0.15MPa~2.00MPa	
Ambient and Fluid Temperature		5~60℃	
Port Size	G1/4"	G3/8"	G1/2"
Drain Bore	G1/8"	G1/4"	G3/8"
Drain Status		Normal Open type	
Working Medium		Compressed Air	

Application

This product serves as a drainer for high-pressure air source system and functions to divert water for the whole pipeline system. It is generally used for the equipment inconvenient for manual discharge of water or comparatively high frequency of water discharge such as the low spots of pipeline,freezing type air drier and the water deposit place of air chamber etc.

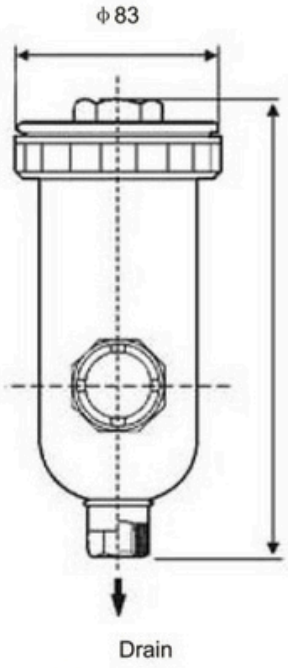

■ Points for Attention:

When using,the draine r should be installed vertically the drain port facing down.

Auto Drain
Metal protective cover with view window

ZDFS Auto Dischaer



Max.Working Pressure:1.0Mpa

ZDFS2000	AF/AW2000
ZDFS3000	AF/AW3000
ZDFS4000	AF/AW4000

Apóstoles Norte 1725 | Oberá (3360) Misiones | Argentina
Wsp: (3755) 576587 | ventas@belneumática.com.ar (**www.belneumatica.com.ar**)

Water Separator
Series AMG

Series AMG series water separator is installed on the air pressure line to remove water drops in the compressed air. It is suitable for use in cases where "water must be removed, but the air does not have to be as dry as when an air dryer is used" or "an air dryer cannot be used because an electric power supply is not available".



Symbol

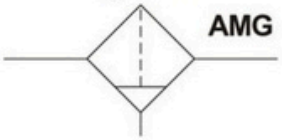

◆ How to Order

AMG 250 F 03 B J

Options*

J	Drain guide 1/4B female thread
R	IN-OUT reversal direction

Accessories(Options)*

Symbol	Description	Symbol	Description
–	None	C	N.C.auto drain
B	With bracket	D	N.O.auto drain

Port size

01	1/8B	06	3/4B
02	1/4B	10	1B
03	3/8B	14	1 1/2B
04	1/2B	20	2B

Thread

–	Rc(PT)	F	G(PF)	N	NPT

Body size

150	1/8	450	1/2
250	1/4	550	3/4
350	3/8	650	1

◆ Specifications

Fluid	Compressed air
Max. operating pressure	1.0MPa
Min. operating pressure*	0.05MPa
Proof pressure	1.5MPa
Ambient / fluid temperature	5 to 60℃
Removal rate of water	99%
Element life	2 years or when pressure drop reaches 0.1MPa

◆ Model

Model	AMG150	AMG250	AMG350	AMG450	AMG550	AMG650
Rated flow(l/min (ANR))(1)	300	750	1500	2200	3500	6000
Port size(Nominal size B)	1/8,1/4,3/8	1/4,3/8,1/2	3/8,1/2,3/4	1/2,3/4, 1	3/4, 1	1,1 1/2
Weight (kg)	0.38	0.55	0.9	1.4	2.1	4.2

Note1) Max. flow capacity at 0.7MPa.
Max. flow depends on operating pressure.

Apóstoles Norte 1725 | Oberá (3360) Misiones | Argentina
Wsp: (3755) 576587 | ventas@belneumática.com.ar (**www.belneumatica.com.ar**)

Water Separator
Series AMG

AMG150 to AMG650

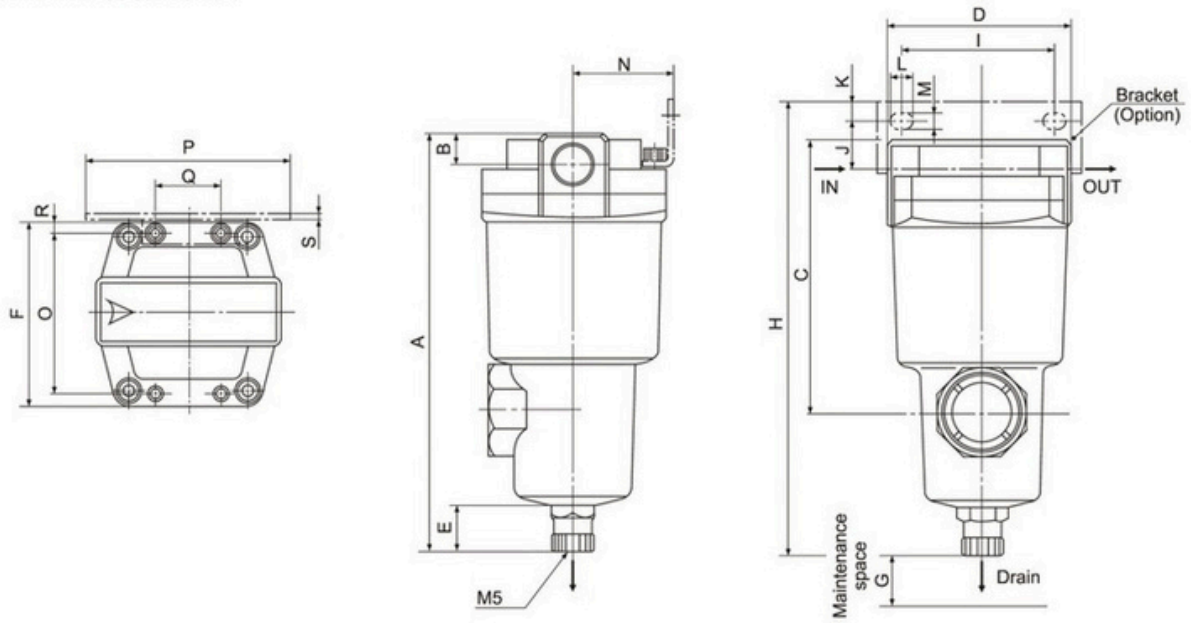

Accessories

D: With auto drain (N.O.Type)

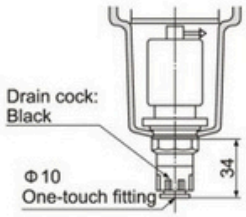

C: With auto drain (N.C.Type)

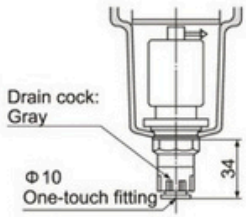

*N.C. type of AMG650 is not available.

Options

J: With drain guide

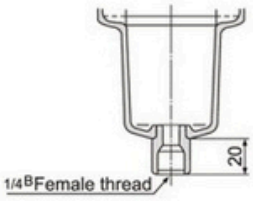

Model	Port size (Nominal size B)	A	B	C	D	E	F	G	Dimensions with mounting bracket											
									H	I	J	K	L	M	N	O	P	Q	R	S
AMG150	1/8,1/4,3/8	159	13	100	63	20	63	10	166	56	15	5	9	5.5	35	54	70	26	4.5	1.6
AMG250	1/4,3/8	172	13	113	76	20	76	10	187	66	20	8	12	6	40	66	84	28	5	2.0
	1/2	178	16	119	76	20	76	10	187	66	17	8	12	6	40	66	84	28	5	2.0
AMG350	3/8,1/2	204	16	145	90	20	90	10	218	80	22	8	14	7	50	80	100	34	5	2.3
	3/4	210	19	151	90	20	90	10	218	80	19	8	14	7	50	80	100	34	5	2.3
AMG450	1/2,3/4	225	19	166	106	20	106	10	241	90	25	10	14	9	55	88	110	50	9	3.2
	1	232	22	173	106	20	106	10	241	90	21	10	14	9	55	88	110	50	9	3.2
AMG550	3/4,1	259	22	200	122	20	122	10	277	100	30	10	16	9	65	102	130	60	10	4.5
AMG650	1,1 1/2	311	32	253	160	20	160	10	334	150	40	15	20	11	85	136	180	76	12	4.5

Apóstoles Norte 1725 | Oberá (3360) Misiones | Argentina
Wsp: (3755) 576587 | ventas@belneumática.com.ar (**www.belneumatica.com.ar**)

Micro Mist Separator
Series AMD

Series AMD can separate and remove aerosol state oil mist in compressed air and remove carbon or dust of more than 0.01 μ m. It should be used as prefilter of compressed air for precision instruments or clean room required for higher clean air.



Symbol

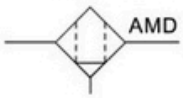

◆ How to Order

AMD 350 – □ 03 B

Accessory (Option)

Symbol	Description
Nil	—
B	Bracket
C	N.C. auto-drain
D	N.O. auto-drain

Port size

01	1/8B	04	1/2B
02	1/4B	06	3/4B
03	3/8B	10	1B

Thread

Nil	Rc
F	G
N	NPT

Body size

350	3/8 (Standard)
550	3/4 (Standard)

◆ Specifucations

Fluid	Air
Max. operating pressure	1.0 MPa
Min. operating pressure(1)	0.05 MPa
Proof pressure	1.5 MPa
Ambient and fluid temperature	5~60℃
Filtration	0.01 μ m (95% particle size collection)
Oil mist removal rate	Max. 1.0 mg/m³ (ANR) (2) (At saturatuion of element oil, less than 0.01 mg/m³ (ANR)≒0.008ppm)
Element life	2 years or when pressure drop reaches 0.1 MPa

Note(1): 0.1 MPa (N.O.type) or 0.15 MPa (N.C.type) in the case of types with auto-drain.
Note(2): At oil mise density of 30 mg/m³ ANR is blown out by compressor.

◆ Model

Model	AMD350	AMD550
Rated flot (ℓ/min (ANR)) Note)	1500	3500
Port size (Nominal size B)	3/8,1/2	3/4,1
Weight (kg)	0.9	2.1
Bracket assembly (With cap bolt and spring washer) (Option)	BM53	BM55

Note) Max. flow capacity at a pressure of 0.7 MPa. Max. flow varies depending on operating pressure.

Apóstoles Norte 1725 | Oberá (3360) Misiones | Argentina
Wsp: (3755) 576587 | ventas@belneumática.com.ar (www.belneumatica.com.ar)

Micro Mist Separator
Series AMD

AMD350, AMD550

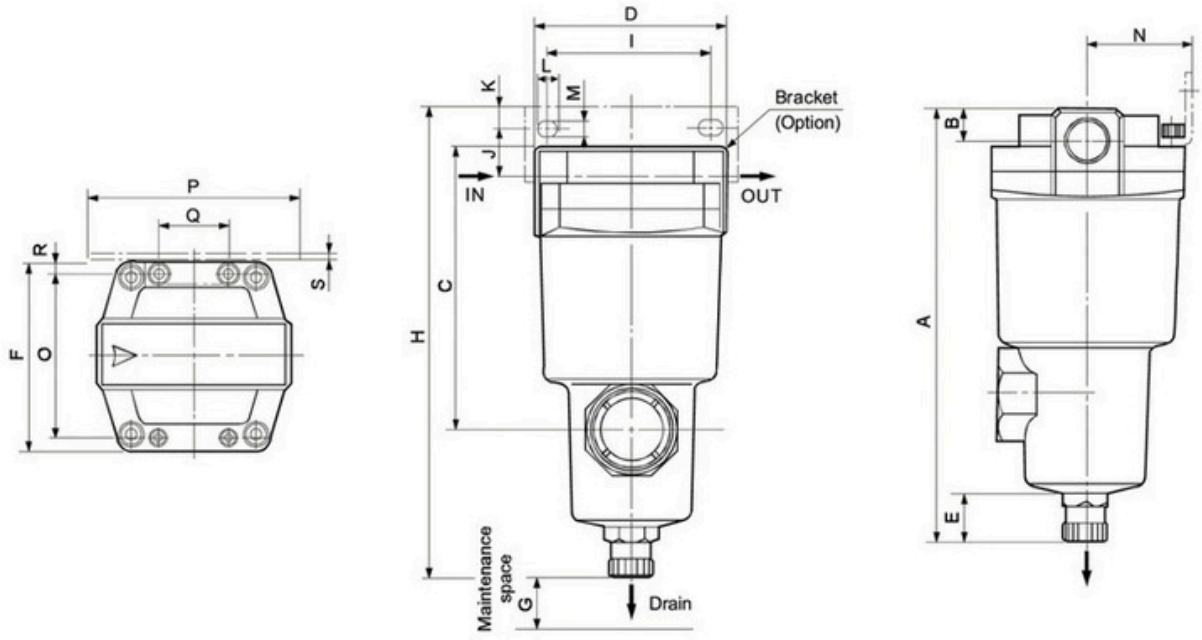

Accessory

D: With auto-drain (N.O.)

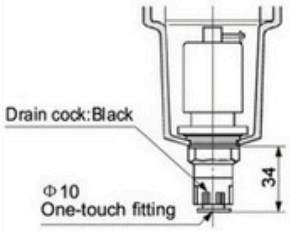

C: With auto-drain (N.C.)

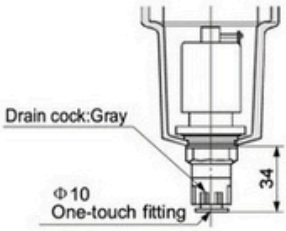

Option

J: With drain guide

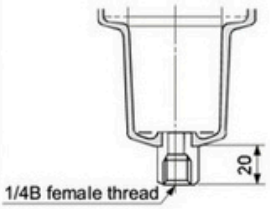

T: With element service indicator

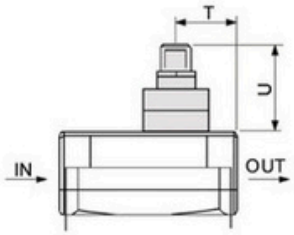

Model	Port size (Nominal size B)	A	B	C	D	E	F	G	Dimensions with mounting bracket												Element service indicator	
									H	I	J	K	L	M	N	O	P	Q	R	S	T	U
AMD350	3/8,1/2	204	16	145	90	20	90	10	218	80	22	8	14	7	50	80	100	34	5	2.3	32	37
AMD550	3/4,1	259	22	200	122	20	122	10	277	100	30	10	16	9	65	102	130	60	10	4.5	39	37

Apóstoles Norte 1725 | Oberá (3360) Misiones | Argentina
Wsp: (3755) 576587 | ventas@belneumática.com.ar (**www.belneumatica.com.ar**)