How to Order

AF 30 00 – □ 03 B



AF2000 AF3000



AF5000

Accessory

Symbol	Description	Applicable model
Nil	—	—
B	Bracket	AF2000 to AF5000
C	Float auto drain(N.C.)	AF2000 to AF5000
D	Float auto drain(N.O.)	AF2000 to AF5000
	Press.differential auto-drain	AF1000 to AF2000

Port size

M5	M5×0.8	03	3/8
01	1/8	04	1/2
02	1/4	06	3/4

Thread

Nil	Meter thread(M5)
	Rc(PT)
N	NPT
F	G(PF)

Body size

10	M5	40	1/2
20	1/8	50	3/4
30	3/8		

Air filter

Symbol
Without auto drain

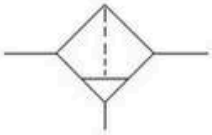

With auto drain

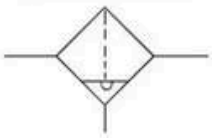

Specifications

Model		AF1000	AF2000	AF3000	AF4000	AF4000-06	AF5000
Port size		M5×0.8	1/4	1/4,3/8	3/8,1/2	3/4	3/4,1
Fluid		Air					
Proof pressure		1.5 MPa					
Max.operating pressure		1.0 MPa					
Flow(ℓ/min(ANR))(Port size)		110(M5×0.8)	750(1/4)	1500(1/4,3/8)	4000(3/8,1/2)	6000(3/4)	7000(3/4,1)
Ambient and fluid temperature		-5~60℃(No freezing)					
Filtration		5μm					
Bowl material		Polycarbonate					
Bowl capacity		2.5	8	23	45	45	45
Weight (kg)		0.07	0.19	0.29	0.55	0.58	1.08
Accessory(standard)	Bowl guard	—	—	●	●	●	●

Dimensions

AF1000, AF2000

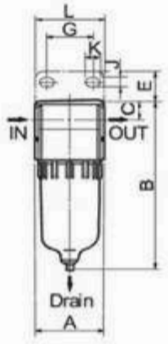

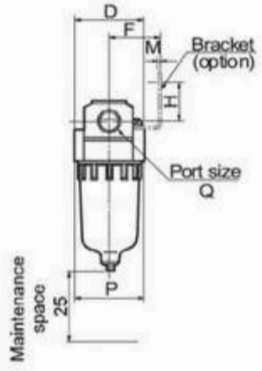

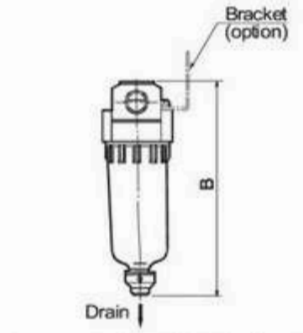

Pressure differential auto drain

AF3000, AF4000, AF4000-06

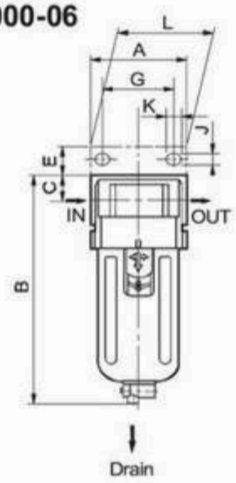

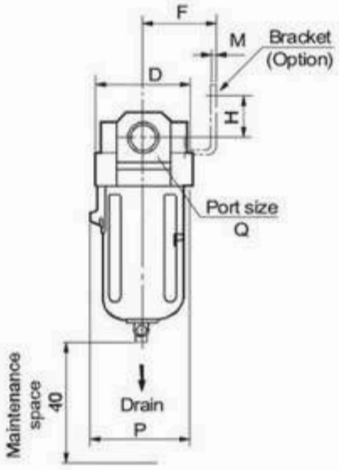

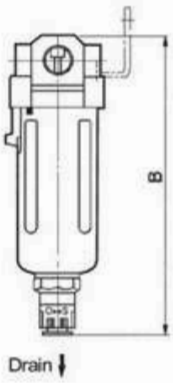

AF5000

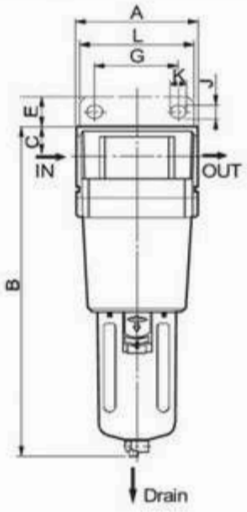

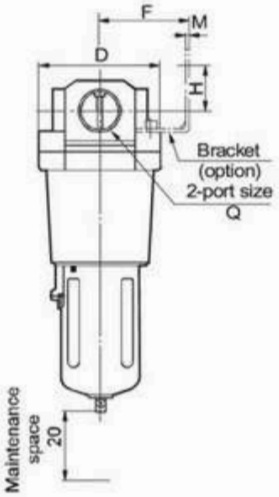

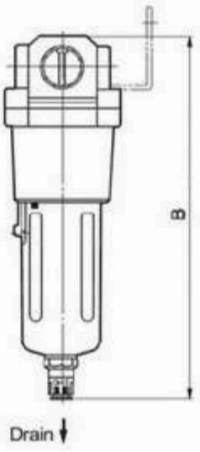

Model	Port size	A	B	C	D	Bracket mounting size								P	With auto drain	
						E	F	G	H	J	K	L	M		Float	Press.Diff.
															B	B
AF1000	M5×0.8	25	66	7	25	—	—	—	—	—	—	—	—	27.5	—	86.5
AF2000	1/4	40	97.5	11	40	17	30	27	22	5.4	8.4	40	2.3	40	—	120.5
AF3000	1/4,3/8	53	129	14	53	16	41	40	23	6.5	8	53	2.3	59	170	—
AF4000	3/8,1/2	70	165	18	70	17	50	54	26	8.5	10.5	70	2.3	73	206	—
AF4000-06	3/4	75	169	20	70	14	50	54	25	8.5	10.5	70	2.3	73	210	—
AF5000	3/4,11	90	244	24	90	23	70	66	35	11	13	90	3.2	—	285.5	—

SMC Standard AL1000 to AL5000 Lubricator

How to Order



AL2000



AL3000



AL5000

AL 30 00 – □ 03 □

Accessory

Symbol	Description	Model
Nil	—	—
B	With bracket	AL2000 to AL5000

Port size

M5	M5×0.8	04	1/2
01	1/8	06	3/4
02	1/4	10	1
03	3/8		

Thread

Nil	Rc(PT)
N	NPT
F	G(PF)

Body size

10	M5	40	1/2
20	1/8	50	3/4
30	3/8		

Lubricator

Symbol

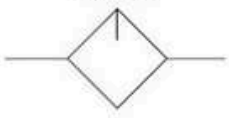

Specifications

Model	AL1000	AL2000	AL3000	AL4000	AL4000-06	AL5000
Port size	M5×0.8	1/4	1/4,3/8	3/8,1/2	3/4	3/4,1
Fluid	Air					
Proof pressure	1.5 MPa					
Max.operating pressure	1.0 MPa					
Min.operating flow(ℓ/min(ANR))(1)	4	15	1/4:30 3/8:40	3/8:40 1/2:50	50	190
Bowl capacity (cm^3)	7	25	50	130	130	130
Recommended oil	Turbin oil class 1(ISO VG32)					
Ambient and fluid temperature	-5~60℃(No freezing)					
Bowl material	Polycarbonate					
Weight (kg)	0.07	0.22	0.28	0.52	0.58	1.08
Accessory(standard) Bowl guard	—	—	•	•	•	•
Bracket assembly(1)	B140A	B240A	B340A	B440A	B540A	B640A

Note(1): Conditions: Primary pressure = 0.5MPa, Number of drops = 5/min, Turbine oil class 1 (ISO CG32), Needle stud fully open.

SMC Standard AL1000 to AL5000 Lubricator

Dimensions

AL1000, AL2000

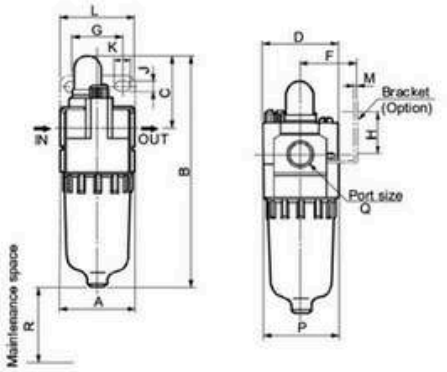

AL3000, AL4000, AL4000-06

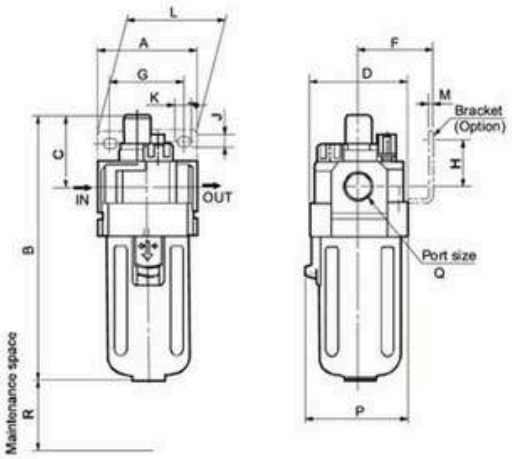

AL5000

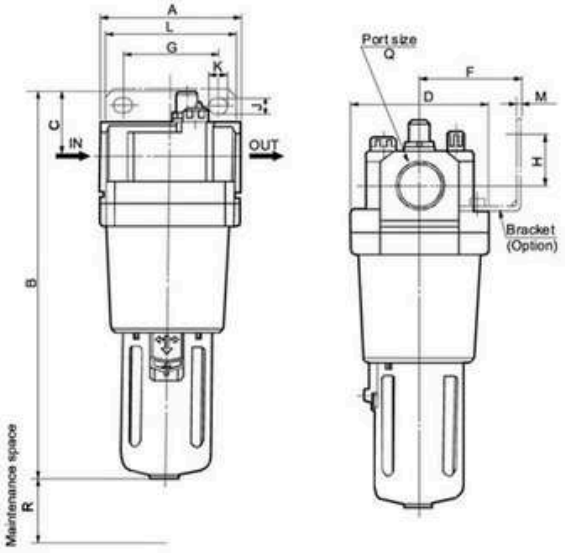

Model	Port size Q	A	B	C	D	Bracket mounting dimensions							P	R
						F	G	H	J	K	L	M		
AL1000	M5×0.8	25	81.5	25.5	25	—	—	—	—	—	—	—	27	50
AL2000	1/4	40	122	38	40	30	27	22	5.4	8.4	40	2.3	40	80
AL3000	1/4,3/8	53	142	38	53	41	40	23	6.5	8	53	2.3	56	95
AL4000	3/8,1/2	70	177	41	70	50	54	26	8.5	10.5	70	2.3	73	120
AL4000-06	3/4	75	177	39	70	50	54	25	8.5	10.5	70	2.3	73	120
AL5000	3/4,1	90	254	45	90	70	66	35	11	13	90	3.2	—	120