

bel
NEUMÁTICA

| DE **MISIONES** PARA TODA LA ARGENTINA.

{CATÁLOGO}

PRESOSTATO DIGITAL

Presostato Digital DPS-2 Series

PANEL

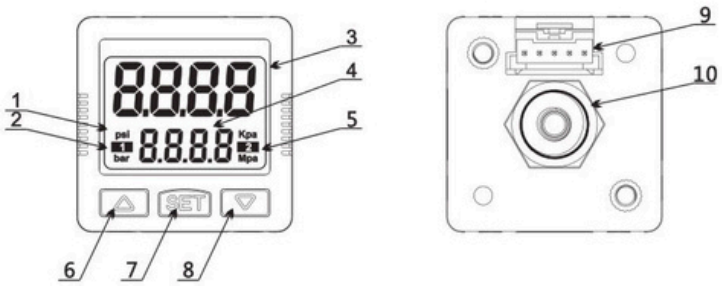

No	Name
1	Pressure Unit
2	Ouput 1 Indicator
3	Main Display Section
4	Sub-display Section
5	Ouput 2 Indicator
6	Up Button
7	Setting Button
8	Down Button
9	Electric Interface
10	Pressure Port

SPECIFICATION

Model		DPS-201(Compound)	DPS-210(Positive)
Pressure measure	Range Of Measure	-100kPa~100kPa	-0.100MPa~1.000MPa
	Setting Range	-100kPa~100kPa	0.000MPa~1.000MPa
	Withstand Pressure	500kPa	1.500MPa
	Pressure Type	Non-flammable ,Non-corrosive gas, Gauge pressure measurement	
	Measure Accuracy	⩽±2%F.S.(Ambient temperature 25°c)	
	Temperature Error	⩽±3%F.S. (Temperature range 0~ 50°c)	
	Measure Pattern	Hysteresis model	
		Compare mode of upper and lower bounds	
Port size		External R1/8、NPT1/8、G1/8 option , internal thread M5	
Display	Brief Description	Double LCD display	
	Status Display	4-digital measurement value ,unit display,output status display	
	Display Model	Adjustable backlight ,4 groups of dispaly models	
Input Power	Voltage Range	12~24vdc ±10%	
	Power Comsuption	40mA MAX(Non-load)	
Output Signal	Transistor Output	NPN open-collector oupt Output current :80mA MAX Voltage drop : ⩽1V	PNP open-collector oupt Output current :80mA MAX Voltage drop : ⩽1V
	Analog Output	Voltage output Signal ampliude:1~5V Load resistance >1 kΩ	Current output Signal ampliude:4~20mA Load resistance<400Ω
	Response Time	Adjustable : 2.5ms、 20ms、 100ms、 500ms、 1000ms、 1500ms	
	Short-circuit Protecdtion	Yes	
Environmetal Resistance	Ip Class	IP40	
	Ambient Temperature	Operating temperature 0~50°c ,storage temperature -20~60°c	
	Ambient Humidity	Operating humidity 35~ 80%RH	
	Insulation Voltage	1000VAC 1min	
	Insulation Resistance	⩾500mΩ(500VDC)	
	Shock	Max100m/s²,3time seach in 6 directions of x,y,z	
	Vibration	A mplitude 1.5mm, 10HZ~ 500HZ, 2 hours each direction of x,y,z	

Apóstoles Norte 1725 | Oberá (3360) Misiones | Argentina
Wsp: (3755) 576587 | ventas@belneumática.com.ar (**www.belneumatica.com.ar**)

Presostato Digital DPS-2 Series

ORDERING CODE

DPS–2 10 R V – □
1 2 3 4 5

1. DPS-2 Series

2. Range
   10: -100~1000kpa
   01: -100~100kpa

3. Port
   R: R1/8(M5 female thread)
   N: NPT1/8 (M5 female thread)
   G: G1/8 (M5 female thread)

4. Output
   N: NPNx2
   P: PNPx2
   A: NPN+Analog 4~20mA
   V: NPN+Analog 1~5V
   B: PNP+Analog 4~20mA
   W: PNP+Analog 1~5V

5. Mounting
   M : Panel
   N : Panel+shield
   Z : L bracket
   S : S bracket

QUICK SETTING

Zero point setting



In the measuremode,press+ △ ▽
button at the same time,untildisplay"0",release the button;
PS:resetrange:+/-10%F.S.

key lock and unlock





Lock: in the measure mode, press
△ + SET + ▽ button at the same time until
"LOCK ON" shown,release the buttons;
Unlock: in the measure mode, press
△ + SET + ▽ button at the same time unitl
"LOCK OFF" shown,release the buttons.

Easy setup

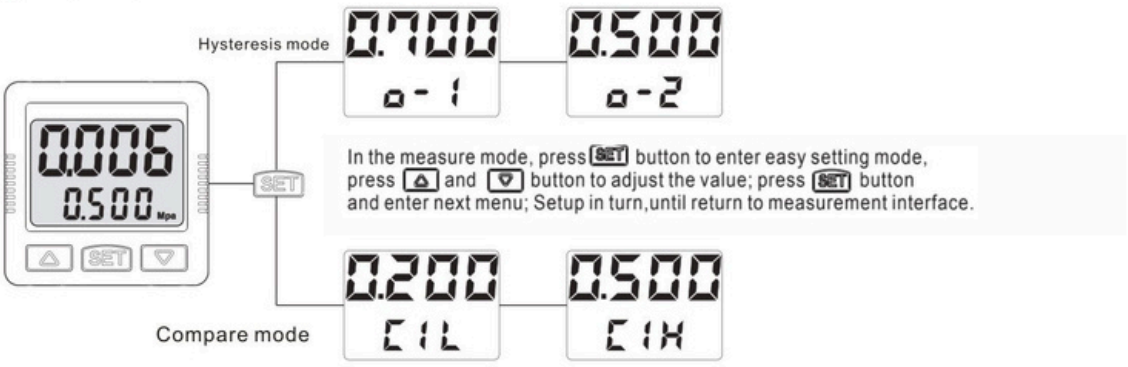

Apóstoles Norte 1725 | Oberá (3360) Misiones | Argentina
Wsp: (3755) 576587 | ventas@belneumática.com.ar (**www.belneumatica.com.ar**)

Presostato Digital DPS-2 Series

MOUNTING DIMENSIONS(mm)

Mounting dimensions(mm)

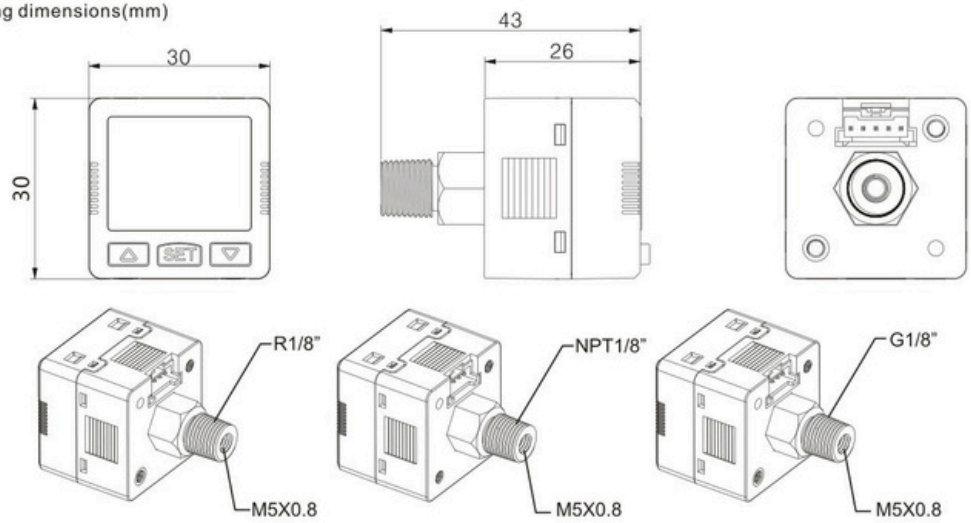

Mounting Bracket

L bracket

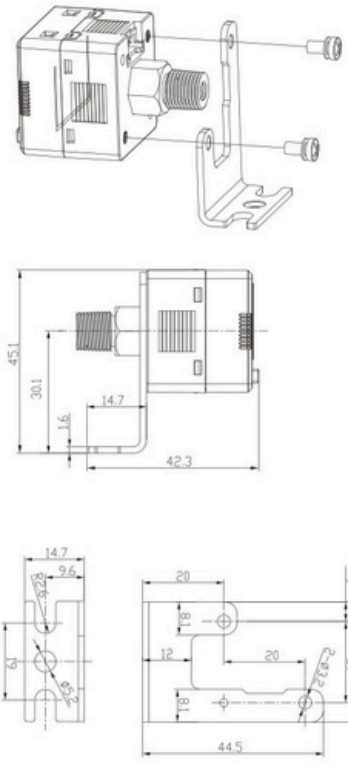

S bracket

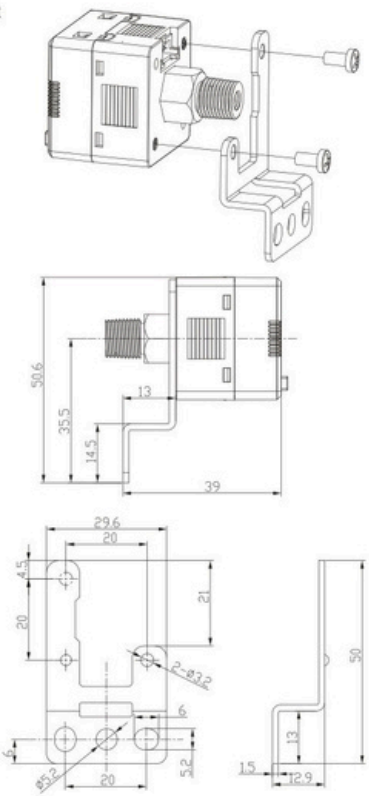

Apóstoles Norte 1725 | Oberá (3360) Misiones | Argentina
Wsp: (3755) 576587 | ventas@belneumática.com.ar (**www.belneumatica.com.ar**)

Presostato Digital DPS-2 Series

Panel bracket

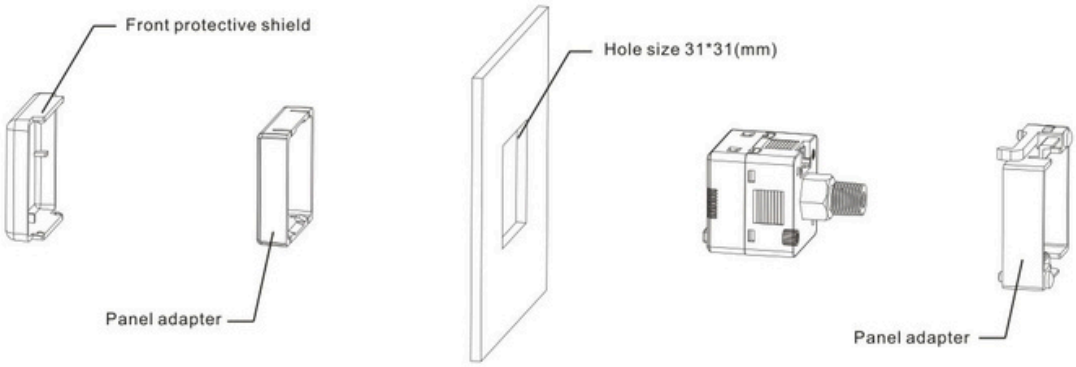

Panel mount

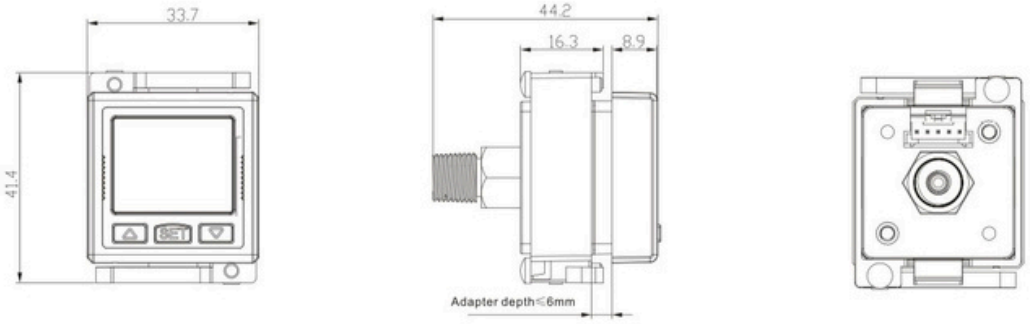

Add dust cover installation

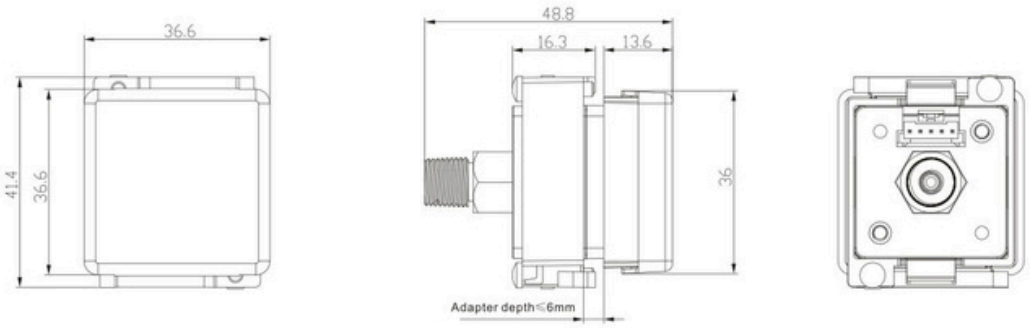

Wire dimension

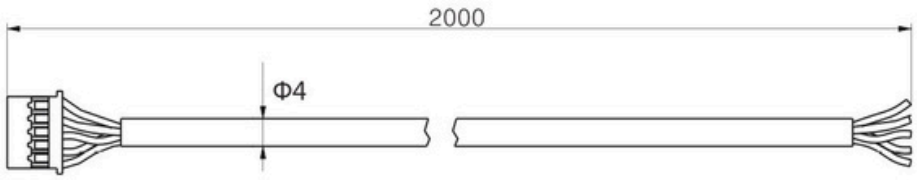

Apóstoles Norte 1725 | Oberá (3360) Misiones | Argentina
Wsp: (3755) 576587 | ventas@belneumática.com.ar (**www.belneumatica.com.ar**)